A2-4 Communication

■ ATS BOX

Input / output ports of ATS Box are as follows.

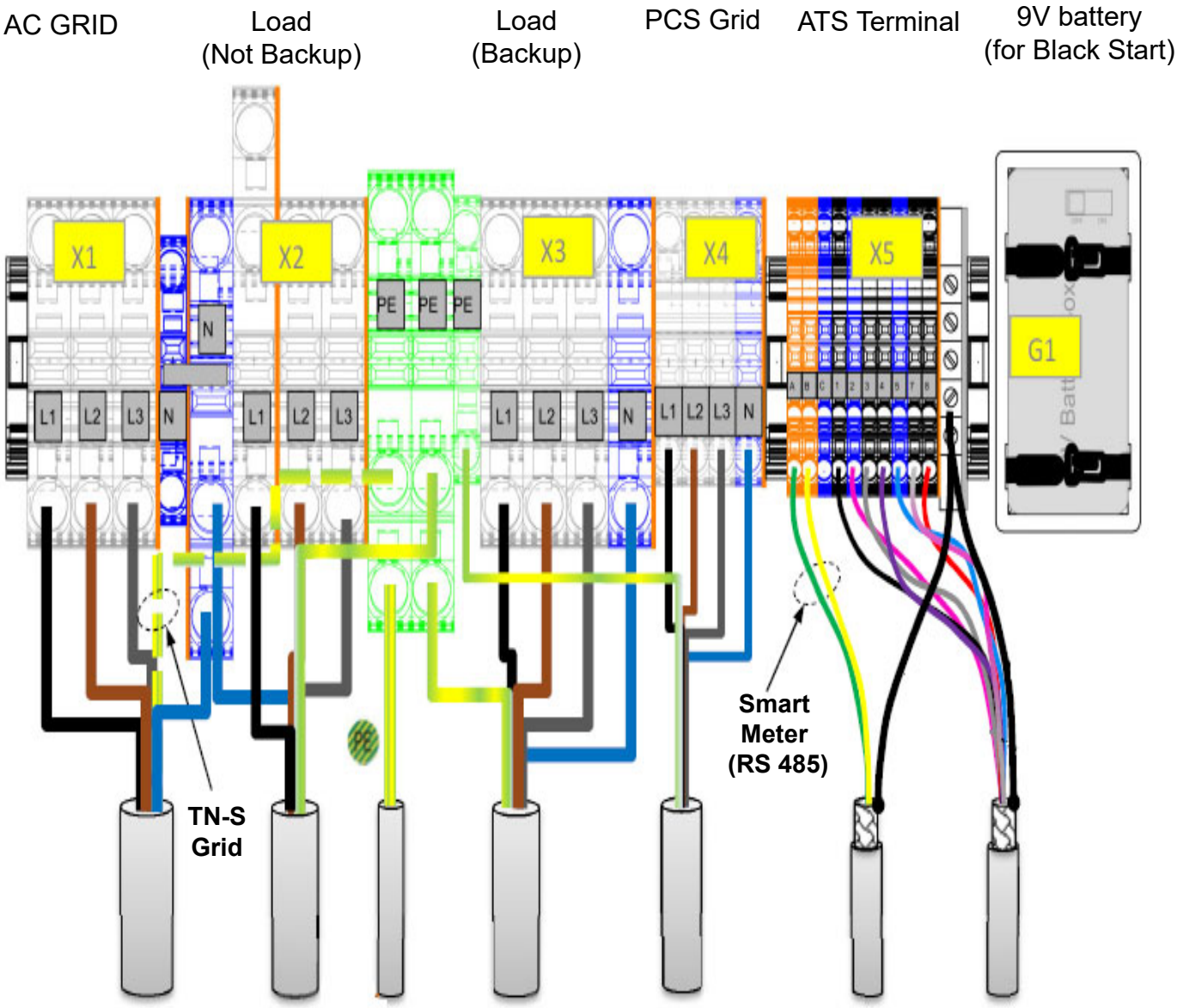

A2-4 Communication
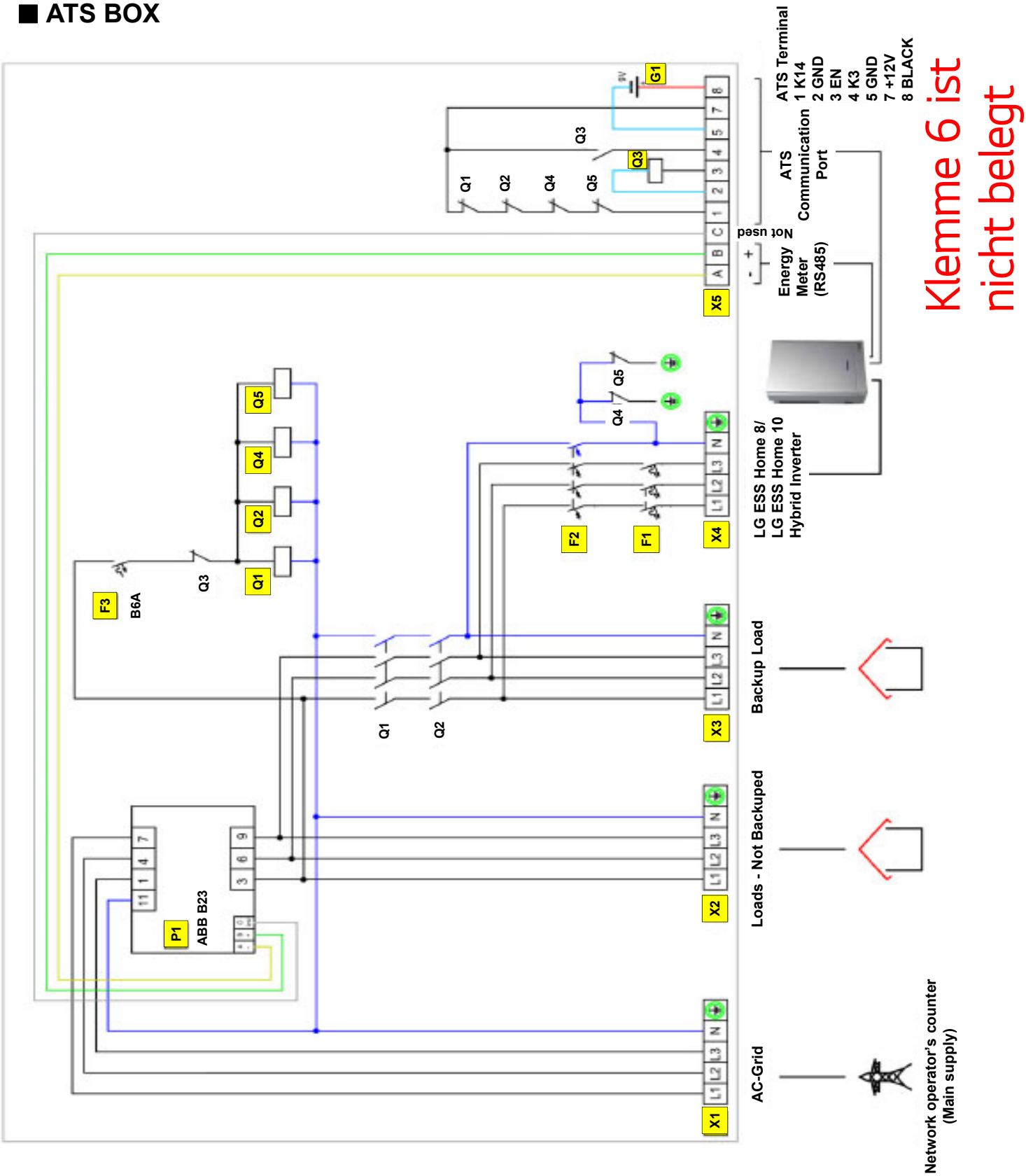
■ ATS BOX